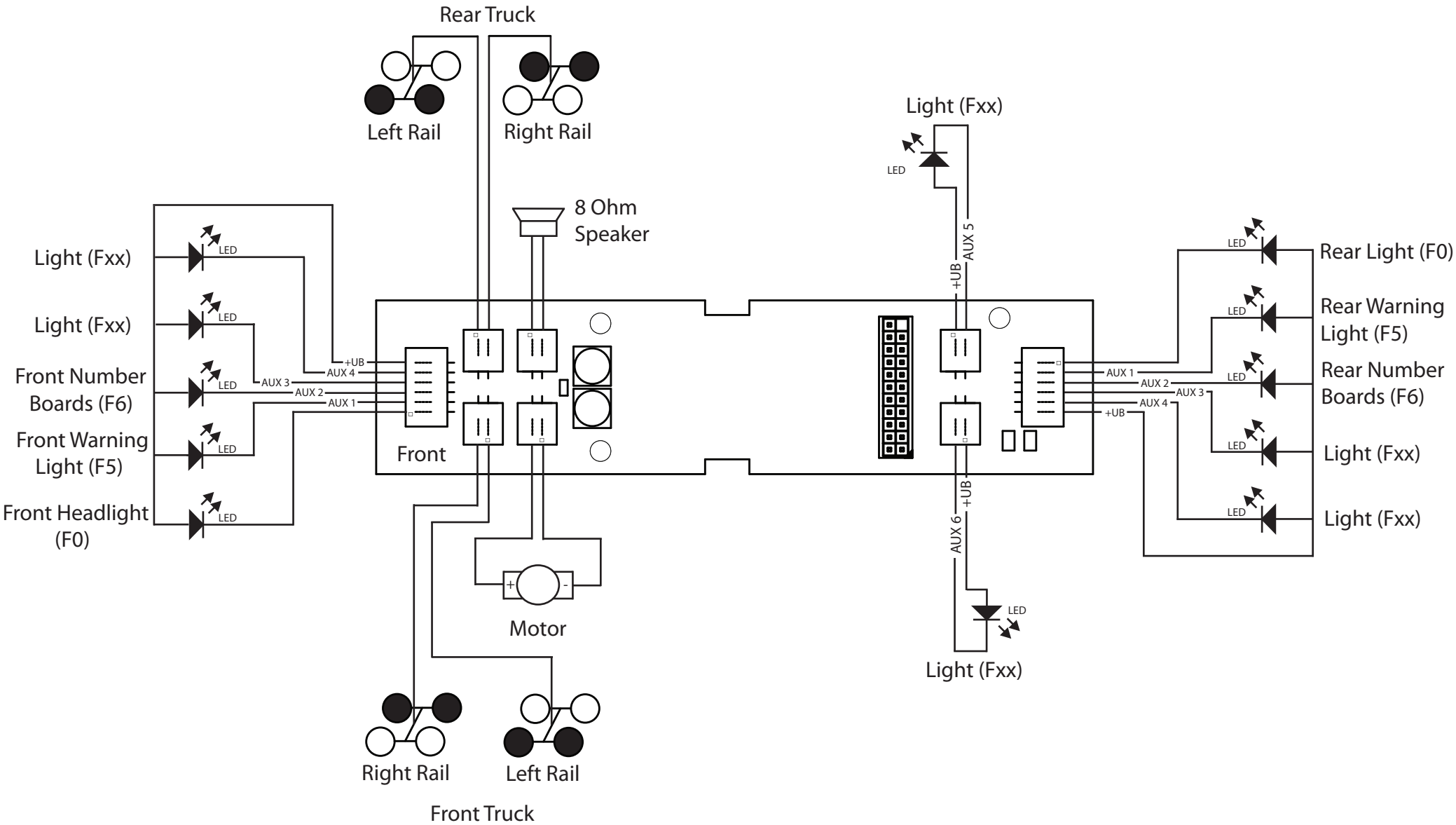Walthers 21mtc Mother Board - Narrow